MERCRUISER (5.7L EFI GM 350 V-8 1998)
Serial Nbr Range: 0L326000 THRU 0L331598 ()

FUEL PUMP AND FUEL COOLER

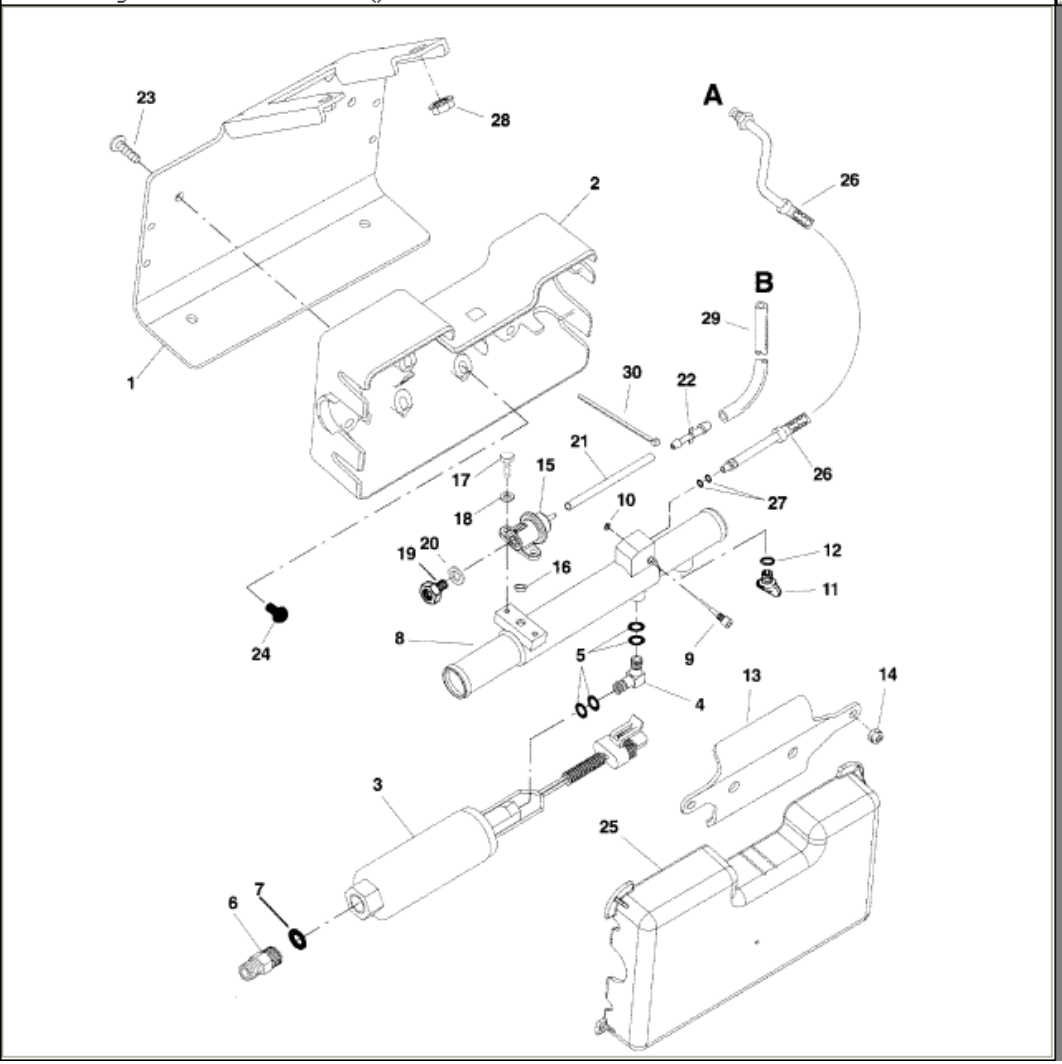

Parts List

Ref	Class	Part	Description	Qty	Comment	Footnote
1		807951T	BRACKET-FUEL COOLER	1		
2		807685T	INSULATOR-BASE	1		
3		807949A 1	FUEL PUMP	1		
4	22	807783A 1	FITTING ASSEMBLY (90 DEG.)	1		
5	25	805063	O-RING	4		2
6	22	808001A 1	FITTING ASSEMBLY	1		
7	25	805062	O-RING	1		2
8		861267A 1	COOLER-FUEL	1		
9	10	861303	SCREW	1		
10	53	861414	RING-RETAINING	1		
11	22	806608A 1	PLUG-DRAIN	1		
12	25	806609	QUAD RING	1		2
13		807979T	PLATE	1		
14	11	29598	NUT (1/4-28)	2		
15		807952A 1	REGULATOR-FUEL PRESSURE	1		
16	35	805406	FILTER-FUEL PRESSURE REGU	1		
17	10	852368	SCREW (#10-24 X 3/4 IN.)	2		
18	12	89302	WASHER	2		
19	22	808002A 1	FITTING ASSEMBLY	1		
20	12	36533	WASHER	1		
21	32	806173 77	HOSE	1		
22	22	807971	CONNECTOR-HOSE	1		
23	10	808005	SCREW (1/4-20 X 1/2 IN.)	4		
24		26901 1	BUMPER-RUBBER	8		
25		807930	INSULATOR-COVER	1		
26	32	861564A 1	FUEL LINE-FUEL COOLER TO FU	1		
27	25	805063	O-RING	2		2
28	11	860069	NUT (3/8-16)	2		
29	32	808047 62	HOSE	1		
30	54	816311	CABLE TIE	AR		3
-	27	861246A98	GASKET SET-ENGINE OVERHAU	1		