MERCRUISER (5.7L EFI GM 350 V-8 1998)
Serial Nbr Range: 0L010035 THRU 0L325976 ()

FUEL FILTER

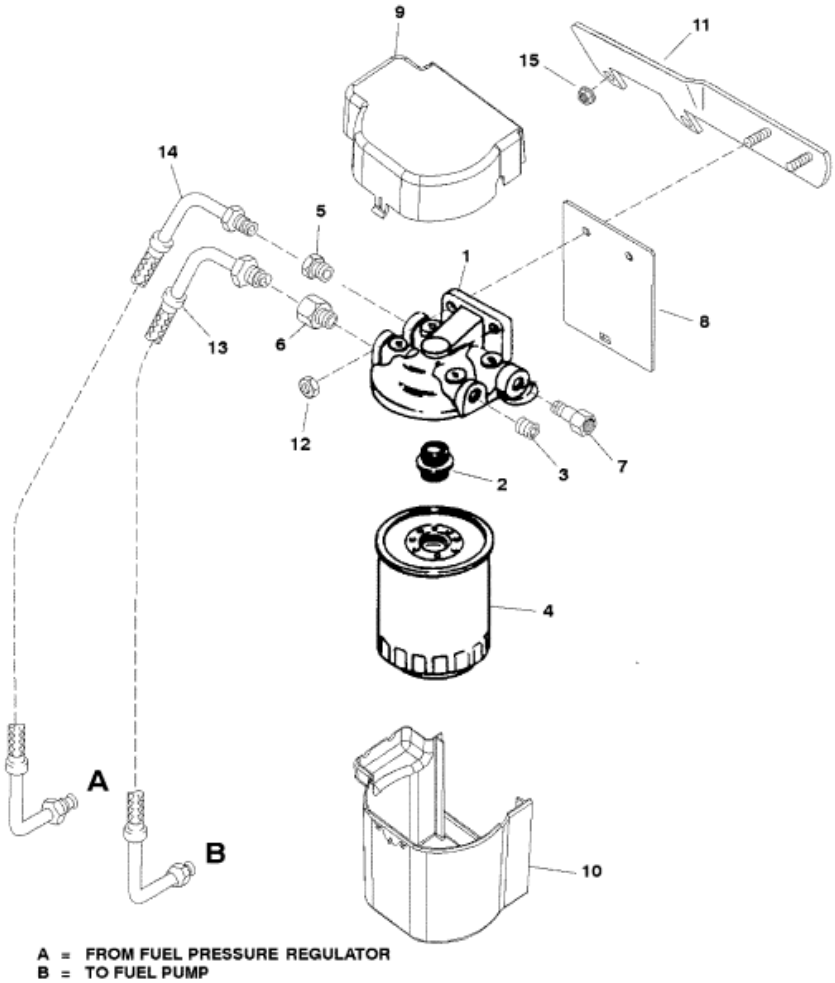

Parts List

Ref	Class	Part	Description	Qty	Comment	Footnote
1		89876A 3	BASE ASSEMBLY-FUEL FILTER/A	1		
2	22	816133 1	FITTING	1		
3	22	32561	PLUG-PIPE (1/4 IN.)	1		
4	35	807172	FILTER-FUEL/WATER SEPARATI	1		
5	22	33821	FITTING	1		
6	22	808003	FITTING	1		
7	22	807958	FITTING-INLET	1		
8		807956T	INSULATOR-BACK	1		
9		807806T	INSULATOR-CAP	1		
10		807807T	INSULATOR-BASE	1		
11		807918T	BRACKET-FUEL FILTER BASE	1		
12	11	45592	NUT (5/16-24)	2		
13	32	807953T	FUEL LINE-FUEL PUMP TO FILTE	1		
14	32	807954T	FUEL LINE-FUEL REGULATOR T(	1		
15	11	860069	NUT (3/8-16)	2		