MERCRUISER (5.0L MPI ALPHA/BRAVO)
Serial Nbr Range: 0W310000 thru 0W649999 (USA)

Oil Pan and Oil Pump

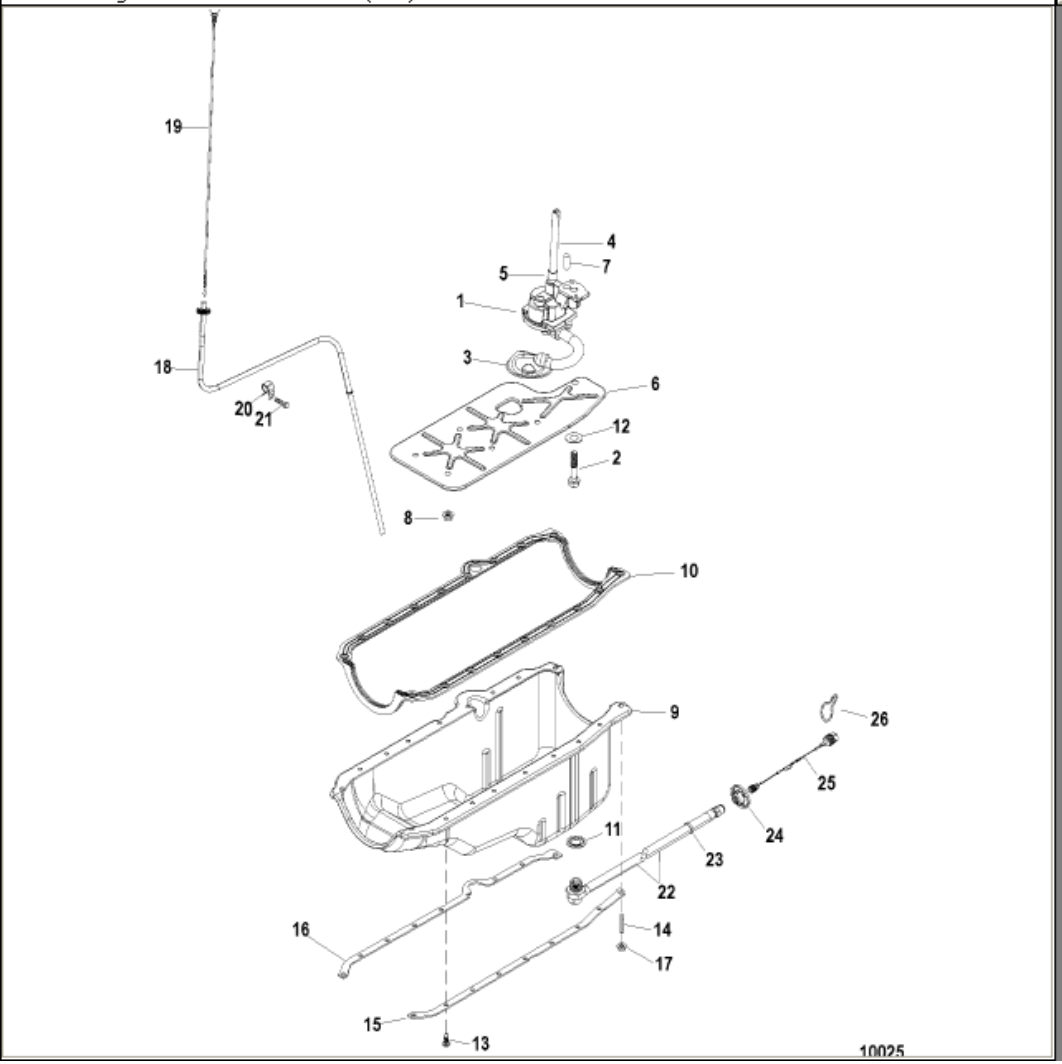

Parts List

Ref	Class	Part	Description	Qty	Comment	Footnote
1		809907 1	PUMP ASSEMBLY, Oil	11		
2	10	17346	SCREW, Oil Pump	1		
3		809909	SCREEN, Oil Pump Pick Up	1		
4		36184	SHAFT	1		
5	23	36183	RETAINER	1		
6		98602 1	DEFLECTOR, Oil	1		
7	17	843378	PIN, Dowel, Alignment, Oil Pump	1		
8	11	845602	NUT, (.375-16)	5		
9		809910	PAN, Oil	1		
10	27	13865 1	GASKET, Oil Pan	1		
11	27	49955	GASKET, Drain Screw	1		
12	12	27339	WASHER	1		
13	10	14070	SCREW, (.250-20 x .625)	14		
14	16	11989	STUD, (.312-18 x 1.6718)	2		
15		14257	REINFORCEMENT, Port	1		
16		14256	REINFORCEMENT, Starboard	1		
17	11	11971	NUT, (.312-18)	4		
18		862704A 4	TUBE, Dipstick	1		
19		861942T 9	DIPSTICK, Oil Level	1		
20	54	805625	CLIP, Dipstick Tube	1		
21	10	35366	SCREW, (.250-20 x .563)	1		
22	32	865281	HOSE, Oil Drain	1		
22	32	865280	HOSE, Oil Drain	1	(Jackshaft Models)	
23	54	863481	CLAMP, Ty Strap	1		
24		862777	FLANGE, Drain	1		
25		862827	TETHER ASSEMBLY	1		
26	54	805524	CLIP	1		
-	27	861246A05	GASKET SET, Engine Overhaul	1		