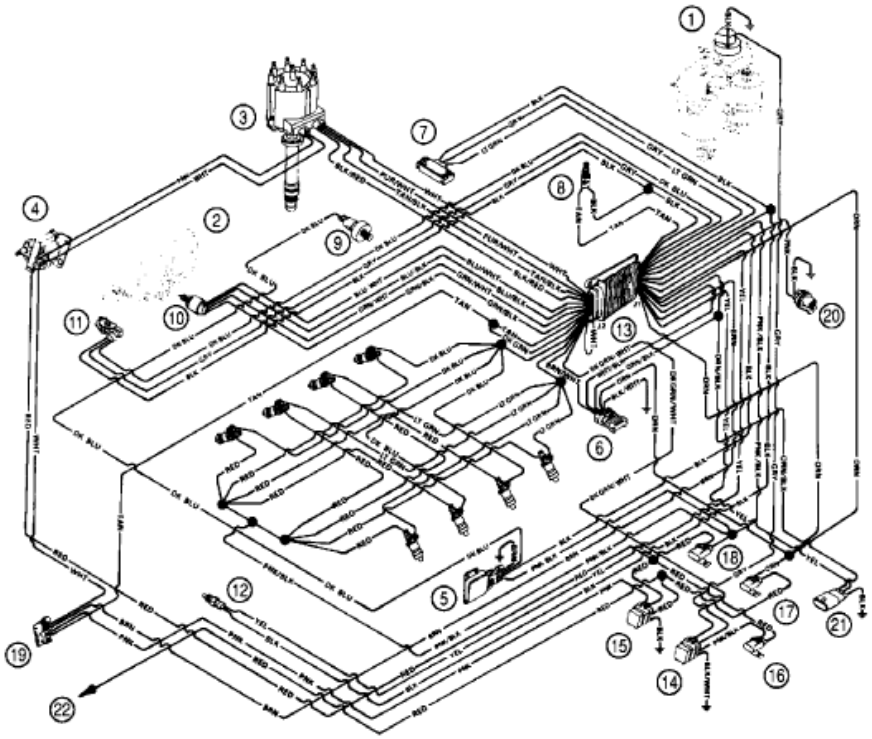

1 VAPOR SEPARATOR TANK (VST)
2 THROTTLE BODY
3 DISTRIBUTOR
4 COIL
5 ELECTRONIC SPARK CONTROL (ESC) MODULE
6 ASSEMBLY LINE DATA LINK (ALDL)
7 MANIFOLD ABSOLUTE PRESSURE (MAP) SENSOR
8 MANIFOLD AIR TEMPERATURE (MAT) SENSOR
9 KNOCK SENSOR
10 IDLE AIR CONTROL (IAC)
11 THROTTLE POSITION SENSOR (TPS)
12 COOLANT TEMPERATURE SENSOR (CTS)
13 ELECTRONIC CONTROL MODULE (ECM)
14 FUEL PUMP RELAY (P/N 807057)
15 SYSTEM RELAY
16 FUEL PUMP FUSE
17 ECM/BATTERY FUSE
18 ECM/INJECTOR FUSE

19 HARNESS CONNECTOR TO STARTING/CHARGING HARNESS
20 HARNESS CONNECTOR TO LANYARD STOP SWITCH (OPTIONAL)
21 HARNESS CONNECTOR FOR DUAL ENGINE DATA LINK CABLE
22 POSITIVE (+) POWER WIRE TO ENGINE CIRCUIT BREAKER

Parts List

Ref	Class	Part	Description	Qty	Comment	Footnote
-	84	805232A 4	WIRING HARNESS (EFI)	1		