MERCRUISER (454 MAG. BRAVO MPI (GEN VI) GM 454 V-8 1996-1997)
Serial Nbr Range: 0F802350 THRU 0K999999 ()

VAPOR SEPARATOR TANK

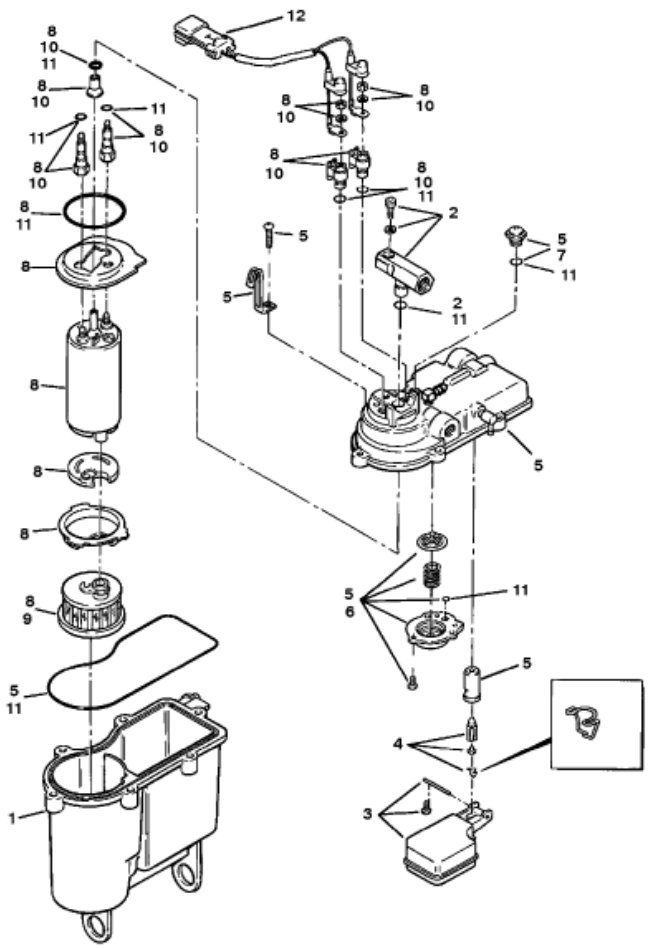

Parts List

Ref	Class	Part	Description	Qty	Comment	Footnote
1		806787A 3	TANK ASSEMBLY-Vapor Separato	1		
2		808502	L-JOINT KIT	1		
3		808506	FLOAT KIT	1		
4		808507	VALVE KIT-Float	1		
5		827655	TOP COVER KIT	1		
6		808509	DIAPHRAGM KIT	1		
7		808501	PLUG KIT	1		
8		808505	PUMP KIT-Fuel	1		
9		808504 1	STRAINER KIT-Fuel	1		
10		808503	CONNECTOR KIT-Electrical	1		
11		808500	O-RING KIT	1		
12		808510	HARNESS KIT-Wiring	1		