MERCRUISER (350 MAG. ALPHA EFI(GEN+) GM 350 V-8 1996)
Serial Nbr Range: 0F800300 THRU 0K001508 ()

OIL FILTER AND ADAPTOR

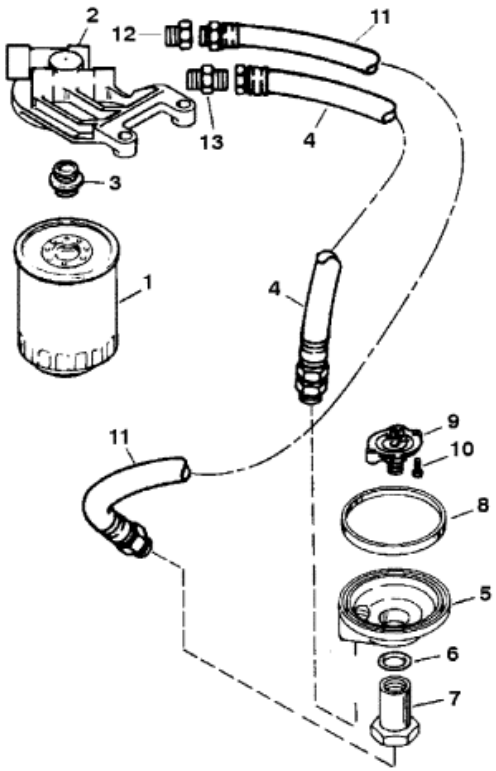

Parts List

Ref	Class	Part	Description	Qty	Comment	Footnote
1		14957	OIL FILTER	1		
2		817403A 4	BRACKET	1		
3	22	814822	ADAPTOR	1		
4	32	806634T	HOSE	1		
5	35	818400A 1	ADAPTOR	1		
6	26	42077	SEAL	1		3
7	22	806121	FITTING	1		
8	27	91892	GASKET	1		3
9		53338	ADAPTOR	1		
10	10	54786	SCREW	2		
11	32	806633T	HOSE	1		
12	22	805563	FITTING	1		
13	22	806186	FITTING	1		
-	27	75611A96	GASKET SET-OVERHAUL	1		